A World Class Supplier of CMOS Sensors™

I-MAGIC™

The Best in Class devices for your Night Vision solutions

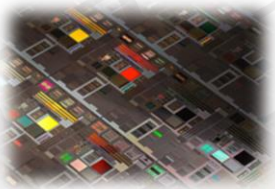

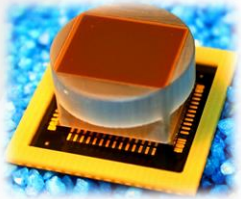

New Imaging Technologies SA
1 Impasse de la noisette, Bat D-1er étage
91370 Verrière le Buisson - France

www.new-imaging-technologies.com

A World Class Supplier of CMOS Sensors™

Today's Night Vision Sensor Technologies

Solide-State silicon Based technologies

- Low noise CCD/CMOS
- EMCCD sensors

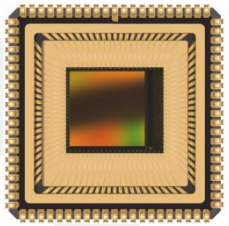

SWIR extended technologies

- VIS-SWIR sensors (InGaAs, MCT, etc…)

Vacuum based technologies

- Image Intensifier assisted solide state-sensor
- Operational all night conditions

Native WDR™

New Imaging Technologies SA
1 Impasse de la noisette, Bat D-1er étage
91370 Verrière le Buisson - France

Limitations of current NV technologies

Direct NV

- Direct vision needs a human presence
- Videos cannot be captured/transmited

Thermal Imaging

- Thermal imaging cannot be used in all conditions (rain, snow etc..)
- Identification is not possible.

Conventional ICMOS/ICCD

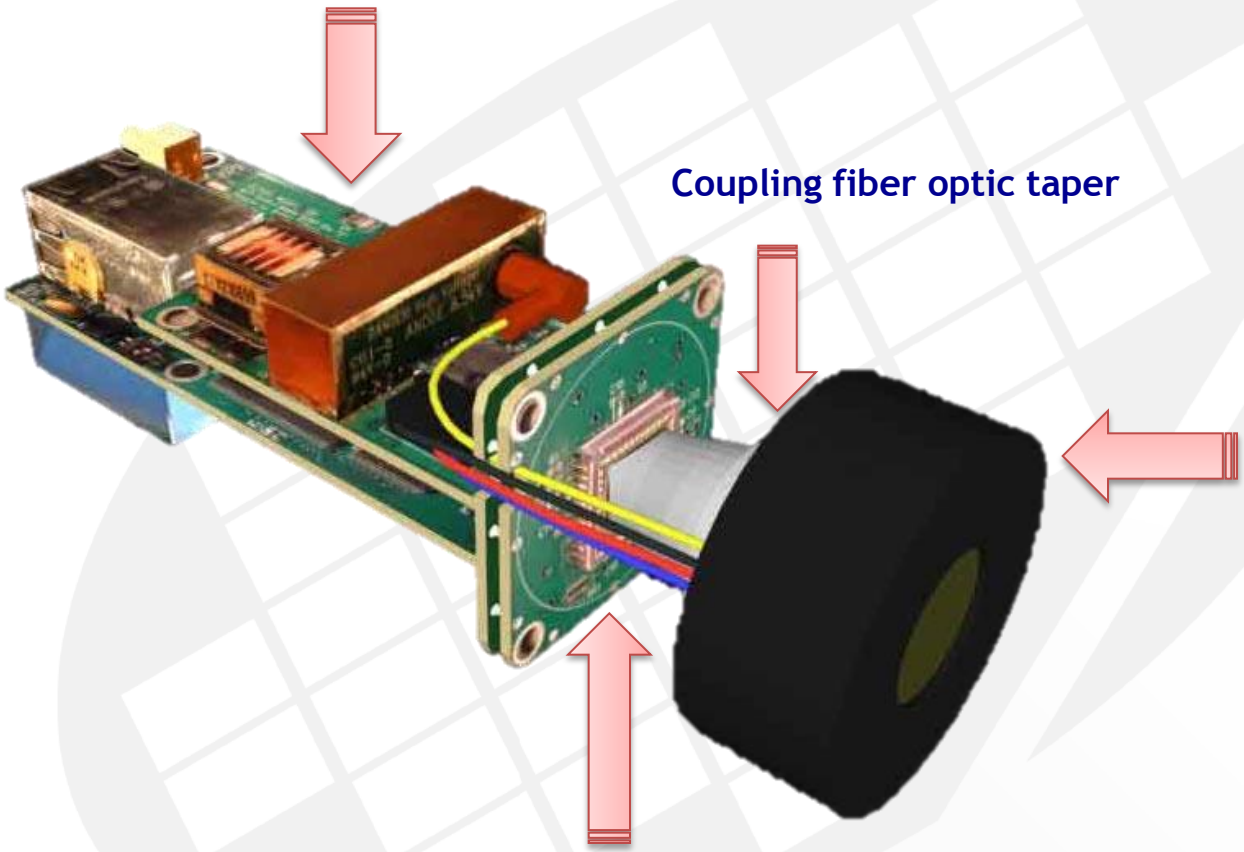

New Imaging Technologies SA
1 Impasse de la noisette, Bat D-1er étage
91370 Verrière le Buisson - France

ICMOS/ICCD
Advantages & Shortcomings

Advantages

- High sensitivity
- High QE Photocathode
- Ultra-low dark signal
- Low power consumption & no TEC needed

Shortcomings

- Noise factor>1
- **Low Dynamic Range**
- **Blooming**
- **Moderate MTF**
- Material cost (taper)

New Imaging Technologies SA
1 Impasse de la noisette, Bat D-1er étage
91370 Verrière le Buisson - France

ICMOS/ICCD
Advantages & Shortcomings

Intensified solution with CCD sensor

- Poor Intra scene Dynamic Range
- Saturation induced by the sensor
- Moderate MTF

…..NIT IMAGIC products push these limitations !

IMAGIC
High dynamic range & No blooming

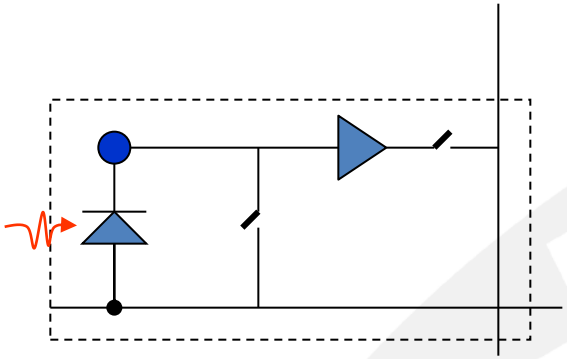

- NIT patented technology
- Using open circuit (V_{oc}) voltage generated by the photodiode
- Logarithmic response with **ultra high dynamic range (> 140dB)**
- **No blooming**
- Highly integrated sensor for simple camera construction

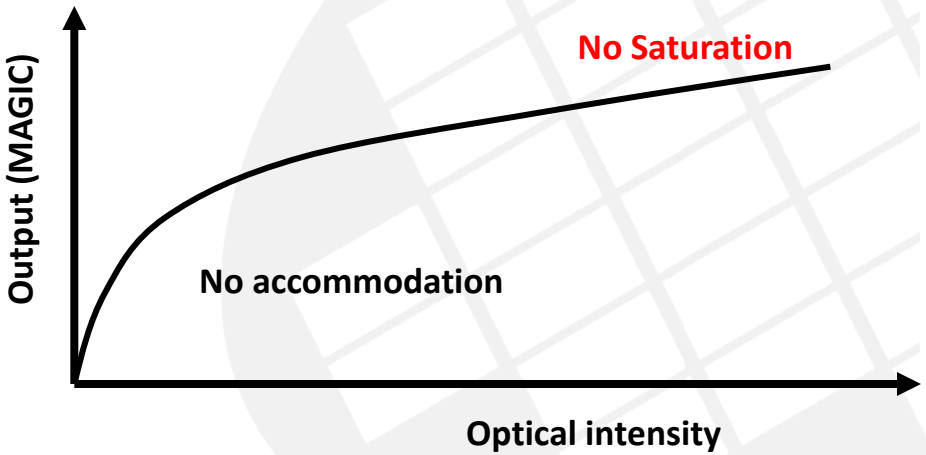

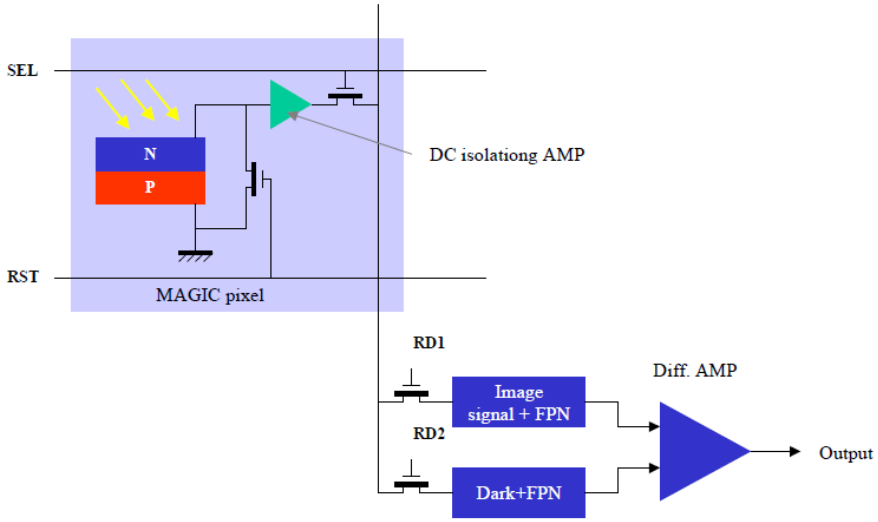

$$V_D = \frac{kT}{q} \ln\left(\frac{I_\lambda + I_s}{I_s}\right)$$

New Imaging Technologies SA
1 Impasse de la noisette, Bat D-1er étage
91370 Verrière le Buisson - France

IMAGIC
High MTF with Black Matrix & 1:1 sensor size

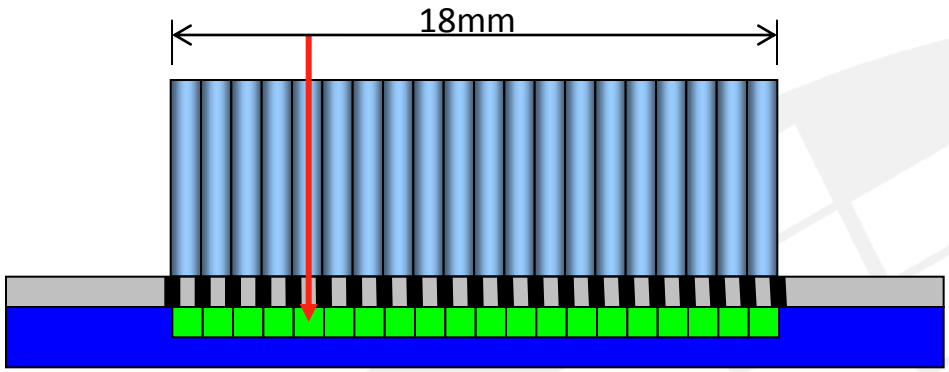

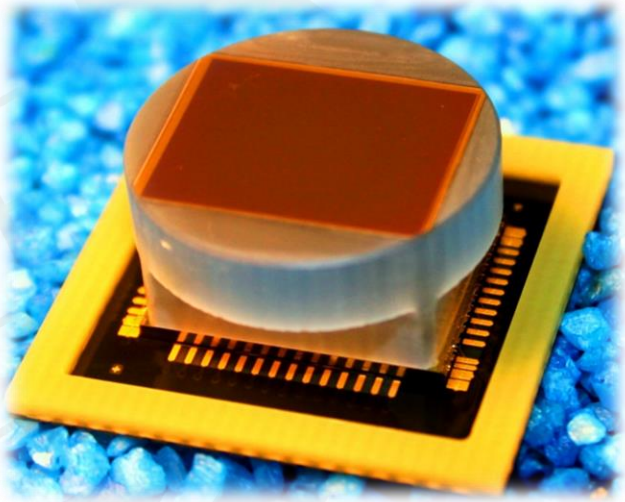

-IMAGIC sensor with Black Matrix – limited cross-talk

-IMAGIC 18mm diagonal – 1:1 **high resolution coupling**

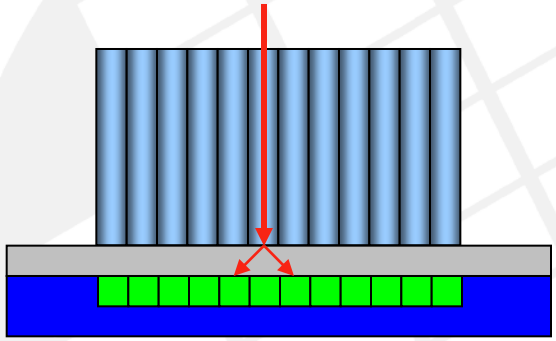

-Classic sensor without Black Matrix – large cross-talk

-Classic sensor small diagonal – 1:N **low resolution coupling**

New Imaging Technologies SA
1 Impasse de la noisette, Bat D-1er étage
91370 Verrière le Buisson - France

Why Imagic is required for NV ?

IMAGIC device reveals and transmits what other cannot see :

- Face recognition is now achievable
- Sharp images and details are generated
- High Dynamic range provided by the sensor
- No saturation/no blooming effect

IMAGIC Night Vision Camera Module

The perfect combination of 2 mature technologies :

- NIT High Dynamic Range CMOS sensors

➔ DR > 140 dB

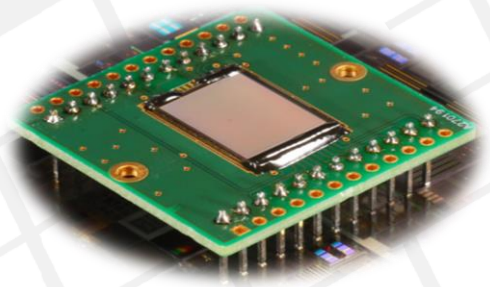

- Image Intensifier Tube

➔ Low light performances

Imagic NV Camera module :

Performance, low power & simplicity

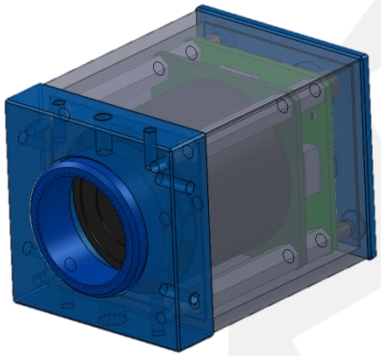

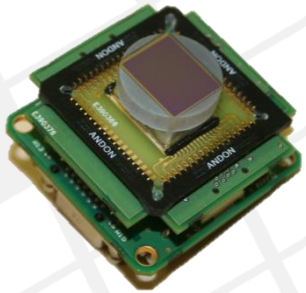

IMagic devices characteristics

Resolution:	768 x 576 @ 15µm or 1280 x 1024 @ 10µm
Dynamic Range:	140dB
Image Intensifier Tube :	Gen2+/Gen3
Frame rate:	up to 50/60 fps
Dynamic range	>140dB
Data output	PAL/NTSC/CameraLink/USB3.0
Operating T°C:	0°C to + 50°C
Dimensions:	46 X 46 X 32 mm
Weight:	110 g
Power consumption	150 mW (analog)

Imagic NV Camera module :

Performance, low power & simplicity

A World Class Supplier of CMOS Sensors™

IMAGIC camera module extends the possibilities of Night vision systems :

- Small form factor camera

- Can be interfaced with Wireless communication

- Low power consumption for portable application

Native WDR™

Conclusions

High performance ICMOS with NIT's WDR sensor

- 1280x1024 1.3Mega pixel resolution
- Low fixed pattern noise
- No processing needed & directly useful video
- Instant adaptation to different scene
- Low power and simple camera structure

Envisioned applications

- Portable night vision camera
- I2/Thermal fusion
- Etc.

Thank you for your attention

info@new-imaging-technologies.com

High MTF & High Dynamic Range

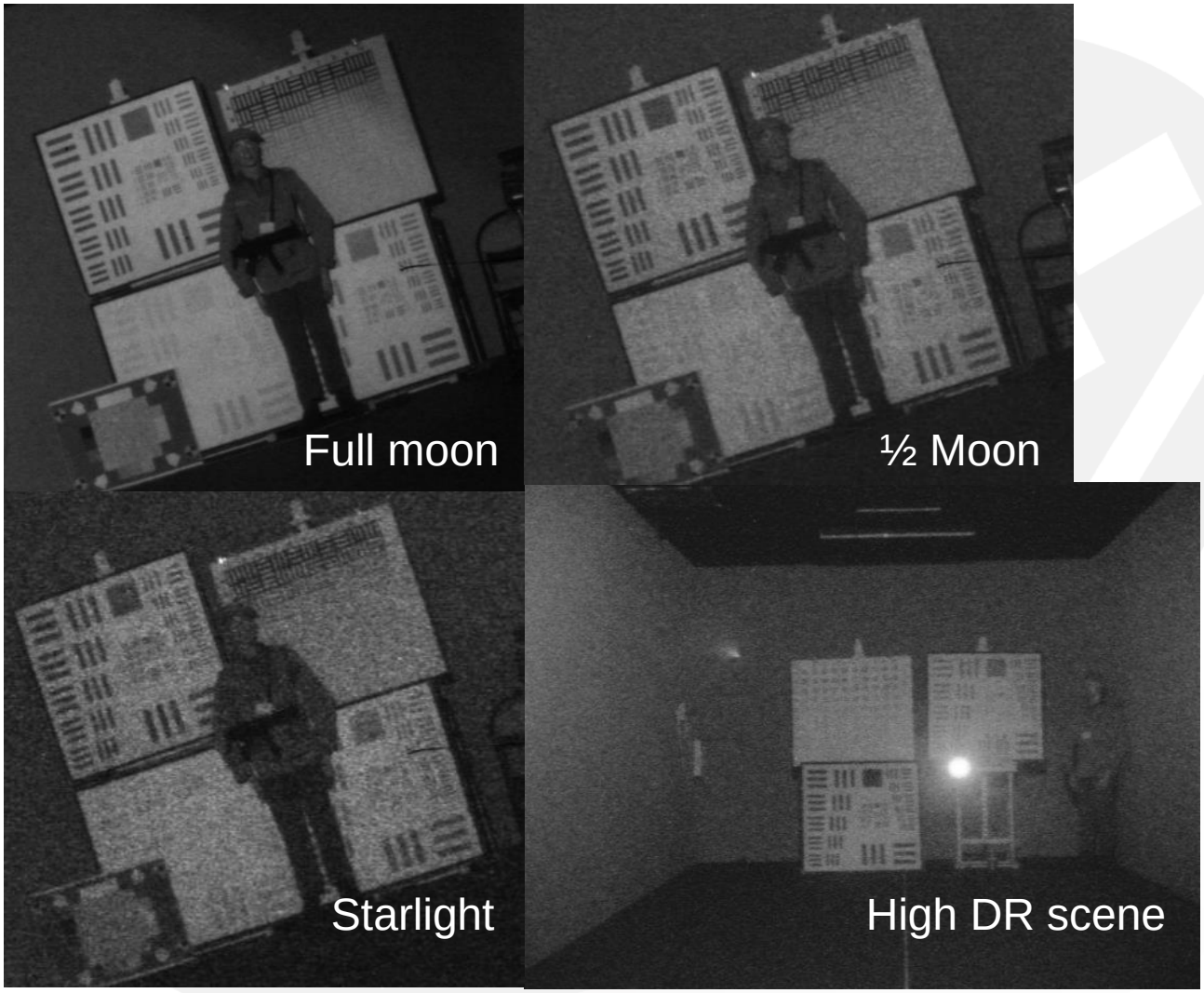

New Imaging Technologies SA
1 Impasse de la noisette, Bat D-1er étage
91370 Verrière le Buisson - France
www.new-imaging-technologies.com

A World Class Supplier of CMOS Sensors™

Sample video 1

New Imaging Technologies SA
1 Impasse de la noisette, Bat D-1er étage
91370 Verrière le Buisson - France

www.new-imaging-technologies.com

Native WDR™

A World Class Supplier of CMOS Sensors™

Sample video 2

New Imaging Technologies SA
1 Impasse de la noisette, Bat D-1er étage
91370 Verrière le Buisson - France

Native WDR™

A World Class Supplier of CMOS Sensors™

Sample video 3

New Imaging Technologies SA
1 Impasse de la noisette, Bat D-1er étage
91370 Verrière le Buisson - France

Native WDR™

IMAGIC NV Camera Module

Performance, Low Power & Simplicity

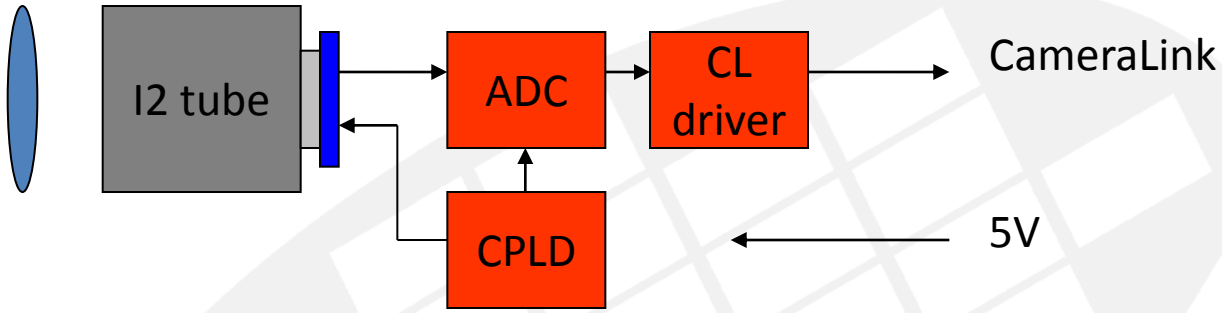

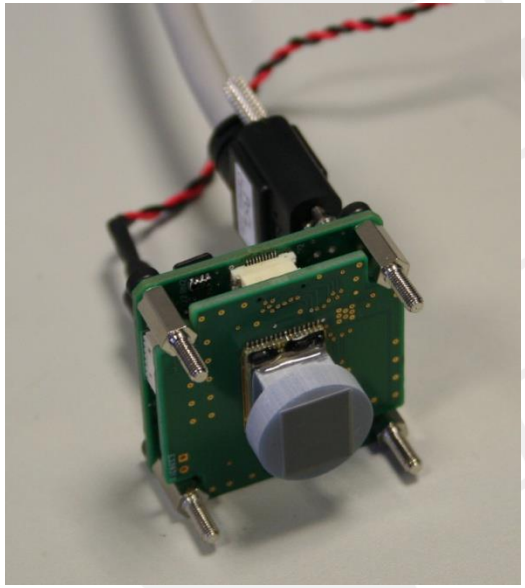

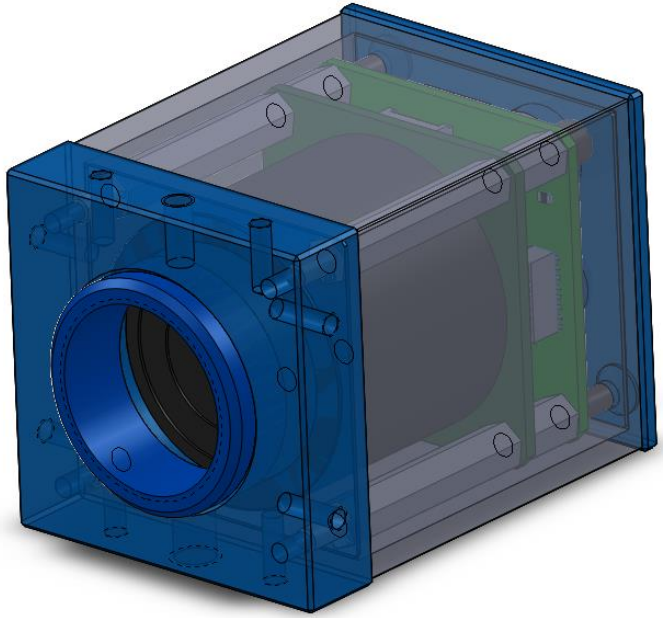

New Imaging Technologies SA
1 Impasse de la noisette, Bat D-1er étage
91370 Verrière le Buisson - France

Thank you for your Attention

Contact

NIT : info@new-imaging-technologies.com